INSTALLATION INSTRUCTIONS FOR PART 15678-824
REAR SPEAKER KIT F/1988-2000 GL1500

NOTE: Read instructions thoroughly before installation.

Tools required:
1 – 6mm hex wrench
1 – #2 medium Phillips screwdriver
1 – Flat blade screwdriver
1 – 10mm wrench
1 – Center punch
1 – Hammer

1. Place bike on center stand.

2. Remove left side cover (item #1A) by grasping at the front and pulling sharply outward to disengage the three bosses (item #1B) and the rubber hole (item #1C) from the frame.

3. Using 6mm hex wrench, remove the four socket bolts (item #1D) and left and right passenger hand grips (Item #1E).

4. Grasp seat cushion rear flap (item #1F) and pull upward toward the rear to disengage the seat front hook (item #1G). Remove seat (item #1H) and set carefully to one side.

5. Unsnap and remove the fairing left-hand pocket cover (item #2A).

6. Using a #2 medium Phillips screwdriver, remove the four screws (item #2B) securing left-hand pocket (item #2C), and remove pocket.

7. Remove lift-side engine cover (items #3B) by grasping at the rear end and pulling sharply outward and toward the rear to disengage the boss (item #3B) and two tabs (item #3C).

8. Using a flat blade screwdriver, pry off left-hand screw cover (item #4A) from left-hand lower fairing corner molding trim (item #4B).

9. Using a #2 medium Phillips screwdriver, remove screw (item #4C) and left-hand lower fairing corner molding trim (item #4B).

10. Remove left-hand cowl trim molding (item #4D) by pulling outward. Remove ignition switch cover (item #4E) by grasping under both sides near rear and pulling sharply upward and toward rear.

11. Open fuel tank access door (item #4F) and release levers (item #4G) located on either side. Using 10mm wrench, remove two acorn nuts (item #4H) at rear of top shelter. With handlebars straight ahead, remove top shelter (item #4I) by grasping under rear and pulling sharply upward to rear.

12. Pull reverse lever cover (item #4J) outward at rear. Pivot to expose socket bolt (item #4K). Using 6mm hex wrench, remove socket bolt (item#4K) and remove reverse lever (item #4L) from motorcycle. Using #2 medium Phillips screwdriver, remove two screws (item #4M) at top front of left side shelter. Using 10mm wrench, remove specials bolt (item#4N) at bottom rear of left side shelter. Remove left side shelter (item #4O) by lifting up and over bolt (item #4P) at top rear corner.

13. Using center punch and hammer, mark fader switch mounting hole location on ignition switch cover (item #5A). You may choose one of three locations: Centered in switch recess area (item #5B) about ¾" from back edge of recess; or centered and in line with GL1500 emblem (item #5C) on left side; or centered and in line with GL1500 emblem (item #5C) on right side.

NOTE: Check underneath for inference or obstructions prior locating hole.

133 Gold St, Worcester, MA 01608 508-791-7552 800-821-9861 fax 508-793-2919
Email: info@addonaccessories.net

INSTALLATION INSTRUCTIONS FOR PART 15678-824
REAR SPEAKER KIT F/1988-2000 GL1500

14. Using electric drill and 9/32" bit, drill mounting hole through ignition switch cover (item #5A), Mount fader switch (item #5F) with nut (item #5G) on top and tighten securely with 10mm wrench. Push fader switch chromed knob (item #5H) in place onto switch.

15. Disconnect white four-pin connectors (item #5I, 5J) on main wiring harness (item #5K) located under left side shelter. Reconnect these connectors (item #5I, 5J) to male and female white four-pin connectors (item #5L, 5M) on fader wiring harness (item #5N). Remove tape (item #5O) holding unused black four-pin connector (item #5Q) on fader wiring harness.

16. Place left and right rear speakers (item #8A) into armrest covers cavity (item #8B). Reattach speaker covers (item #8D).

17. Install rear speaker wiring harness (item #9A) as follows: Terminal end with blue (item #9B) and gray (item #9C) wires goes into left armrest (item #9D). Terminal end with red (item #9E) and brown (item #9F) wires goes into right armrest (item #9G). The four-pin connector (item #9H) is connected to the black four-pin connector (item #9I) located in black rubber boot (item #9J) on main wiring harness in under seat area near large white 24-pin connector. Wire harness (item #9A) is run under front lower edge of trunk (item #9K).

18. Connect rear speakers to wiring harness, making certain sufficient slack is available to open and close trunk without undue pressure on connectors. Reinstall armrest cover assemblies (being careful not to pinch wiring harness) and trunk pocket cover by reversing stem #15.

19. Operate radio and fader to make certain system works properly. Reinstall all other removed items by reversing steps 1 through 11.

FIGURE #1

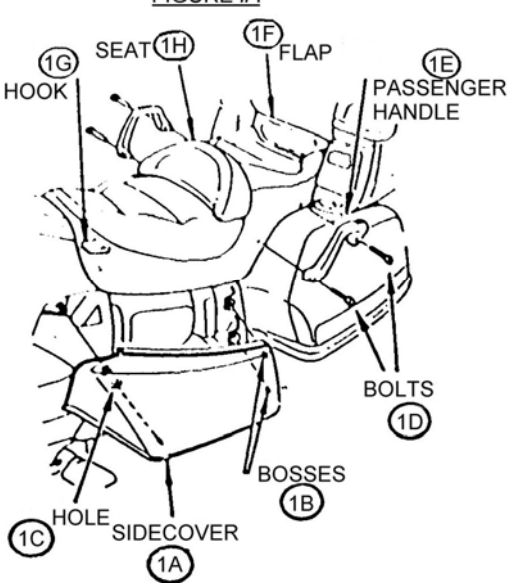

FIGURE #2

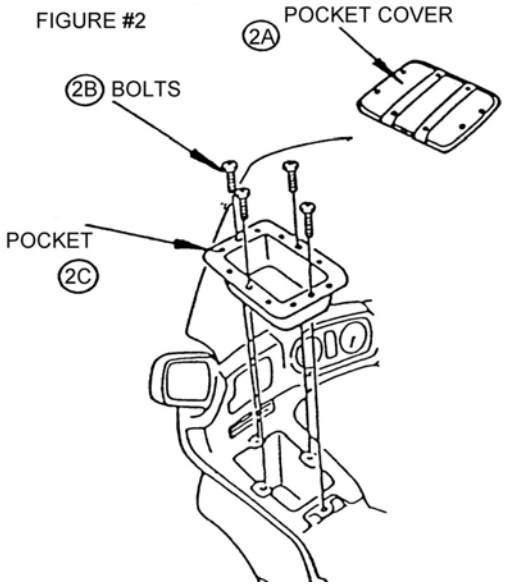

INSTALLATION INSTRUCTIONS FOR PART 15678-824
REAR SPEAKER KIT F/1988-2000 GL1500

FIGURE #3

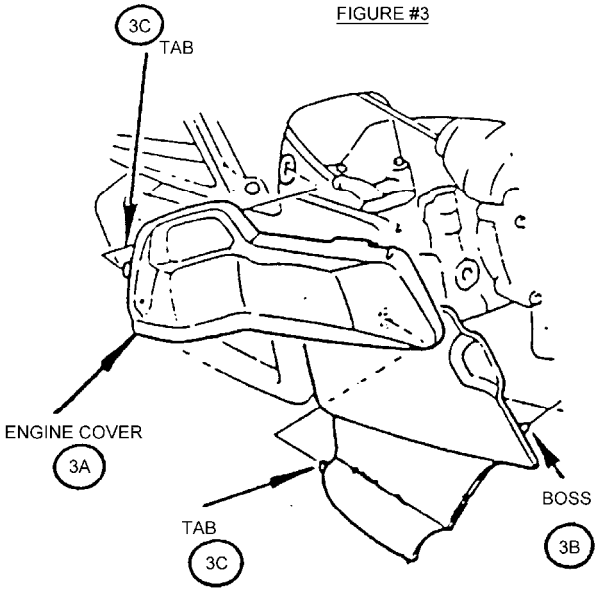

FIGURE 4

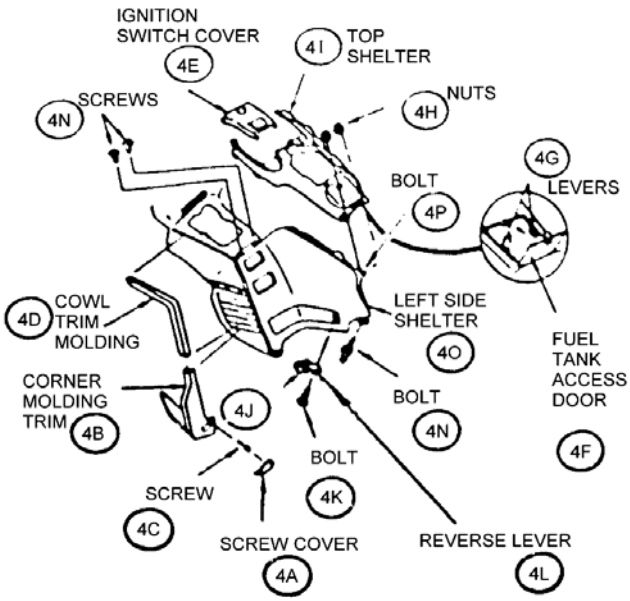

FIGURE 5

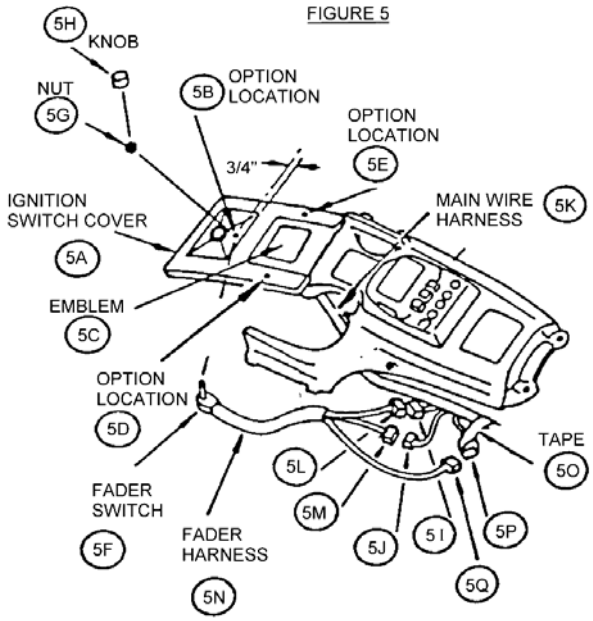

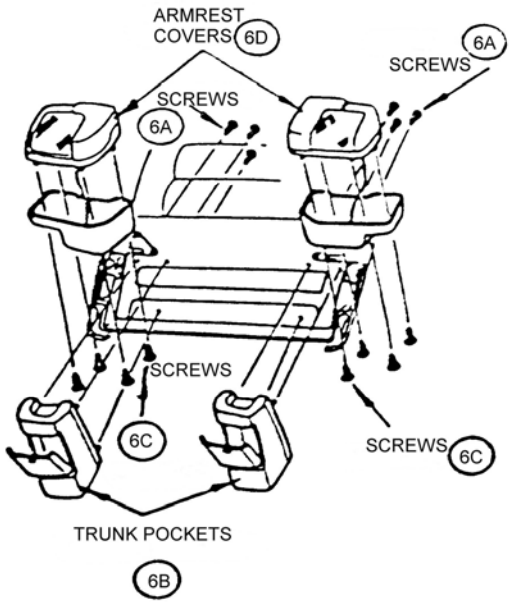

Figure 6

INSTALLATION INSTRUCTIONS FOR PART 15678-824
REAR SPEAKER KIT F/1988-2000 GL1500

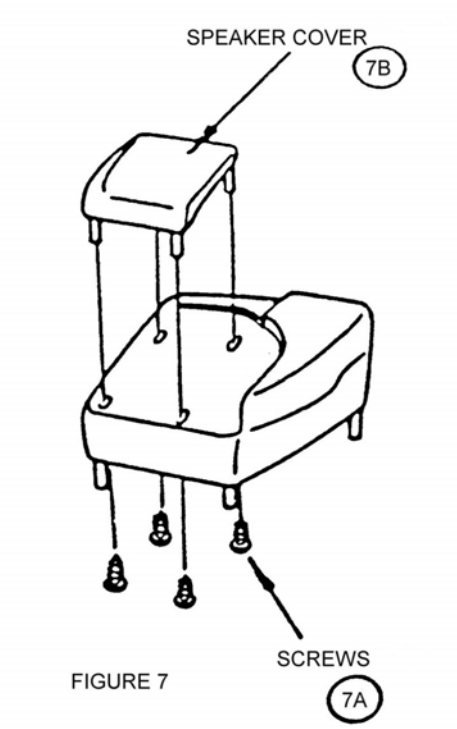

FIGURE 7

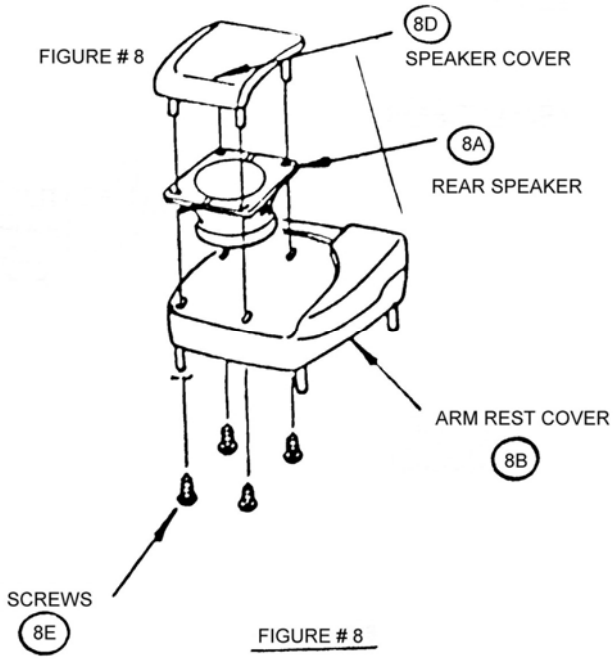

FIGURE # 8

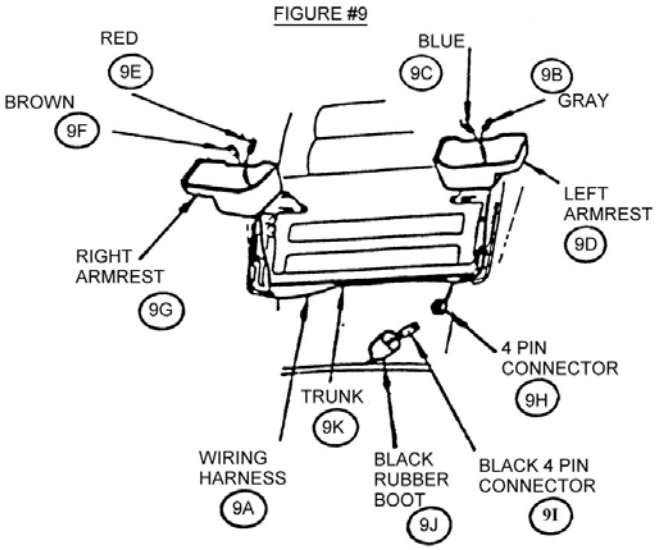

133 Gold St, Worcester, MA 01608 508-791-7552 800-821-9861 fax 508-793-2919
Email: info@addonaccessories.net